ski-doo*

'72 Owner's Manual

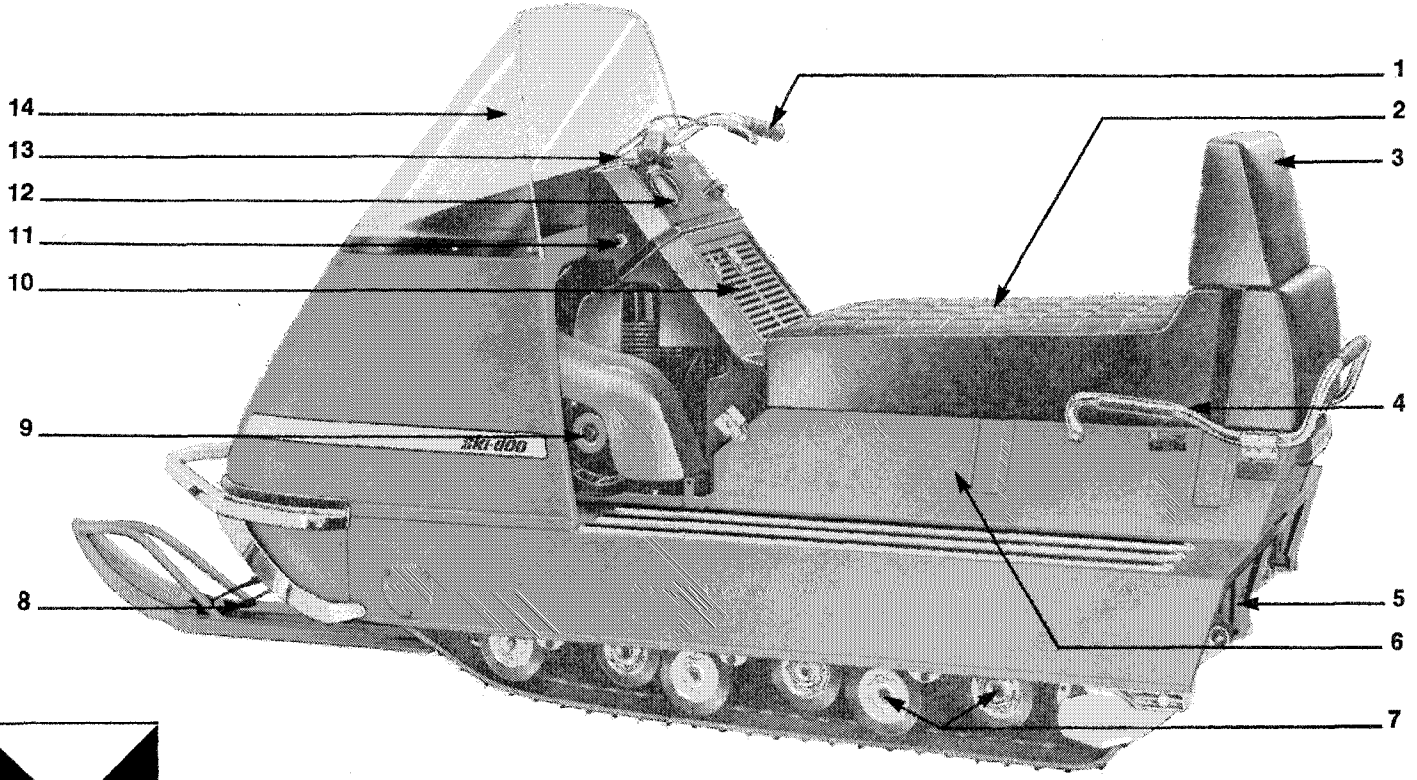

Valmont *

*Trademark Bombardier Limited

1. *Throttle Lever*
2. *Seat*
3. *Backrest*
4. *Side Handle*
5. *Suspension Spring*
6. *Underseat Storage Compartment*
7. *Bogie Wheel Set*
8. *Overload Leaf Spring*
9. *Drive Pulley*
10. *Console*
11. *Choke Knob*
12. *Tachometer*
13. *Brake Lever*
14. *Windshield*

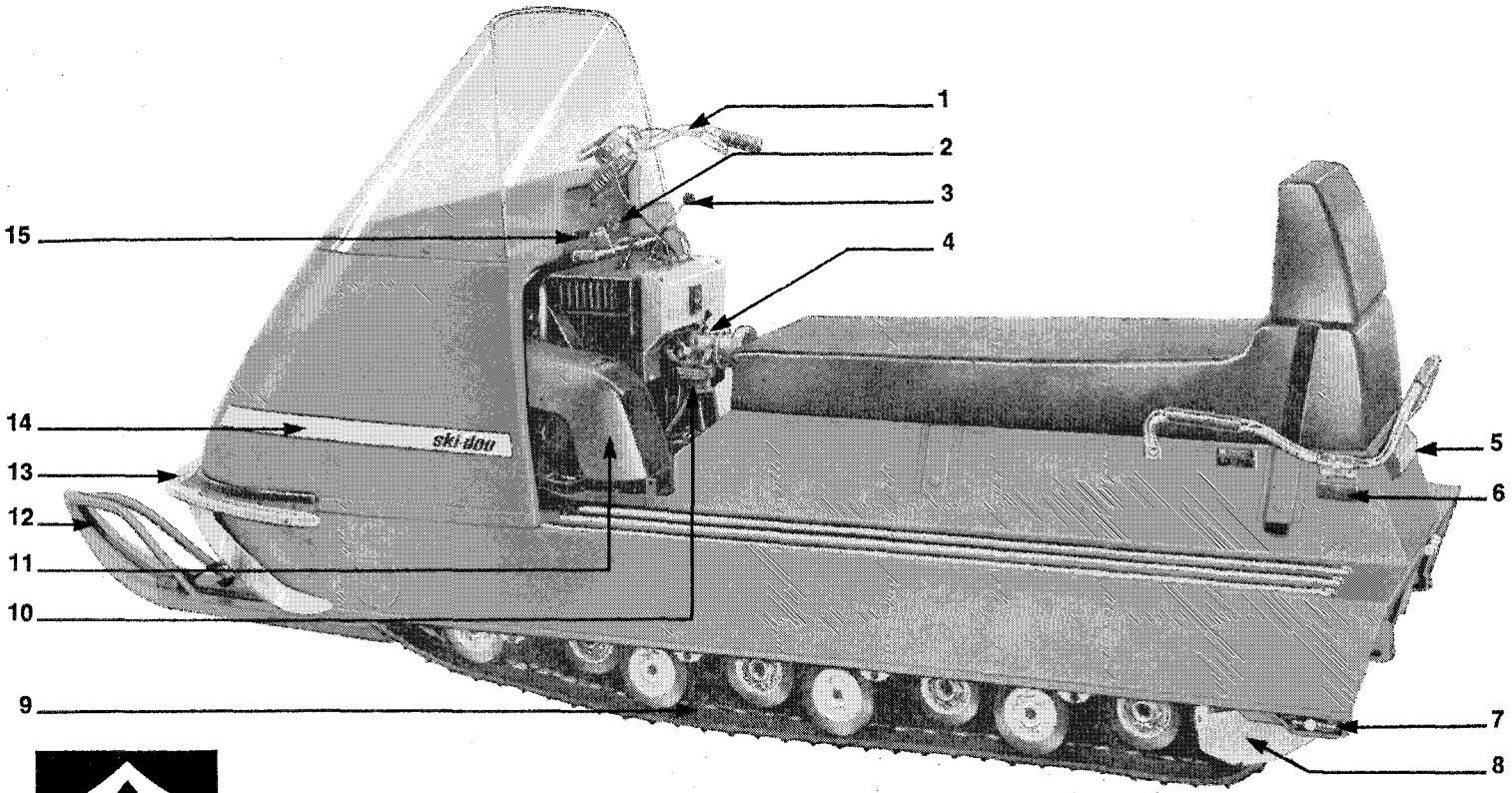

Alpine*

*Trademark Bombardier Limited

1. *Handlebar*
2. *Ignition Switch*
3. *Gear Shift Lever*
4. *Carburetor*
5. *Taillight*
6. *Side Reflector*
7. *Adjuster Bolt*
8. *Link Plate*
9. *Track*
10. *Fuel Filter.*
11. *Pulley Guard*
12. *Ski Assembly*
13. *Front Bumper*
14. *Side Reflective Stripe*
15. *Light Switch*

Lift cover flap for illustrated listing of external features

Alpine*

A truly reliable utility snowmobile, engineered to take it, wherever you take it . . . deep powder or steep slope. Long body length and a full set of bogies, give this highly styled workhorse the lightest footprint in the industry.

Twin 15" track • Single ski • Forward/Neutral/Reverse Transmission • Under-seat storage compartment • Rear and side handles • Disc brake system • Side reflective stripes.

Valmont*

Valmont offers twin-track stance and flotation with single-track mobility. The result is a vehicle that will do just about anything and go just about anywhere. A handsomely appointed, streamlined sport vehicle built for real snow country. In two models, manual or electric.

Canadian Patents Nos: 605,317, 710,592, 724,395.
United States Patent No: 2,899,242.
Design Canada: Rd. 1970, 1971.
Other patent and design applications pending.

*Trademark of Bombardier Limited

Bombardier Ltd. reserves the right to make changes in design and specifications, and/or to make additions to or improvements in its products without imposing any obligations upon itself to install them on its products previously manufactured.

This manual has been published by the Technical Information Centre, Bombardier Ltd., 8600 Decarie Blvd., Montreal 307, Quebec.

*The following are trade marks of Bombardier Limited

Ski-Doo
Ski-Boose
Nordic
Alpine
Valmont
T'NT
Élan
Blizzard
Skandic
Carry-Boose
Bombardier and the crest.

INDEX

SPECIFICATIONS

	ITEM	Valmont 440R	Valmont 440ER	Alpine 640ER
Engine	No. of cylinder	TWO	TWO	TWO
	Bore	2 x 67.5mm	2 x 67.5mm	2 x 76mm
	Stroke	2 x 61mm	2 x 61mm	2 x 70mm
	Displacement	436.6 cc	436.6 cc	635.1 cc
	Horse Power	28 H.P.	28 H.P.	35 H.P.
	Compression Ratio	9:1	9:1	9:1
	Starting	Manual	Electric	Electric
Chassis	Overall Length	104½″	104½″	113¼″
	Overall Width	35″	35″	35″
	Height w/o Windshield	39¼″	39¼″	39¼″
	Weight (lbs)	496	531	596
	Bearing Area	1756 sq. in.	1756 sq. in.	2160 sq. in.
	Ground Pressure (P.S.I.)	0.282	0.302	0.277
Power Train	Track (Width)	2 x 15″	2 x 15″	2 x 15″
	Standard Gear Ratio	13/39	13/39	13/29
	Reverse	Standard	Standard	Standard
Electrical System	Lighting Coil (watts)	75	75	120
	Spark Plug■ (Bosch)	M240T1	M240T1	M280T31
	Spark Plug (Gap)	.020″	.020″	.020″
	Breaker Points	.014″-.018″	.014″-.018″	.014″-.018″
Fuel	Tank Capacity — Imp.	5 gals.	5 gals.	5 gals.
	— U.S.	6.25 gals.	6.25 gals.	6.25 gals.
	Mixing Ratio (Gas/oil)	20:1	20:1	20:1
Brake	Type	Disc	Disc	Disc
Accessories	Tachometer	Standard	Standard	Optional

■ The above spark plug number is recommended when operating the vehicle at full throttle. However, when prevailing conditions do not permit such operation, a hotter plug (one heat range hotter) can be installed to prevent possible fouling. **To prevent piston failure,** always reinstall standard plug for high speed operation.

CONTROLS & INSTRUMENTS

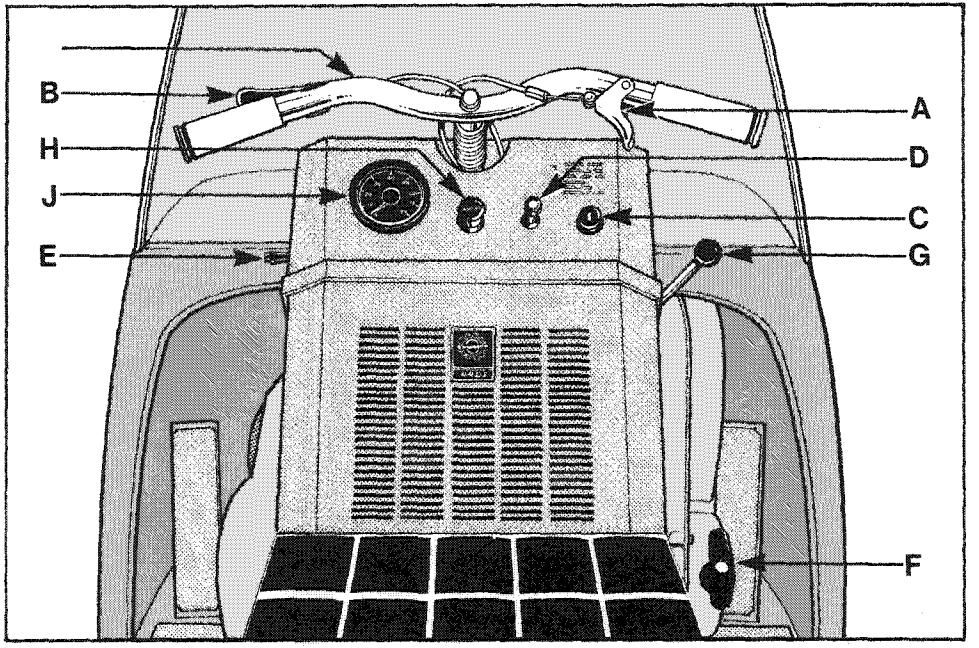

(A) Throttle lever

(B) Brake lever

(C) Ignition switch

(D) Light switch

(E) Choke knob

(F) Manual starter

(G) Gear shift lever

(H) Lighter (Valmont 440ER)

(J) Tachometer (Valmont only)

(K) Handlebar

TOOL KIT AND USES

As standard equipment, Bombardier Ltd. equips each new Ski-Doo snowmobile with the following tools:

Screwdriver

Use for Carburetor Pivoting Slug Screw; to pry off Taillight lens; to open Chain Case Access Covers; etc.

Box Wrench (22/26mm)

Use 22mm end to remove and replace "W" type Spark Plug, 26mm end for "M" type Spark Plug.

Box Wrench (11/13mm)

Use 11mm end to remove Air Silencer (Skandic* Model). Use 13mm end for Engine Head Nuts. Transmission Gear Box Nuts (Alpine/Valmont only).

Pin (8 x 130mm)

Use as handle for Box Wrench.

Open End Wrench (11/13mm)

Use 11mm end for Carburetor Studs (Skandic* Model only). Use 13mm end for left side Carburetor Flange Nut, left side Muffler Flange Nut (single cylinder models only).

Angular Wrench (10/13mm)

Use 10mm end for Rewind Starter Unit bolts. Use 13mm end for right side Carburetor and/or Muffler Flange Nuts.

FUEL MIXING

With Ski-Doo snowmobiles, the OIL must be added to the GASOLINE in pre-measured amounts then both oil and gasoline should be thoroughly mixed together, BEFORE fueling the tank.

The importance of using the correct fuel mixture cannot be over-stressed. Prior experience has shown that the largest cause of engine damage is from incorrect fuel mixtures.

Which Gasoline to Use

The correct gasoline for your Ski-Doo snowmobile is **regular** gasoline, **(not less than 88 octane)** available from all service stations.

Which Oil to Use

Use only Ski-Doo Oil* available in **REGULAR** or **CONCENTRATED** form. Both types have especially formulated oil bases to meet the lubrication requirements of the Bombardier-Rotax engine.

CAUTION: *Unless absolutely necessary (in case of emergency) do not use outboard or straight mineral oil. Never use multi-viscosity oils.*

Fuel Mixing Ratio

When using REGULAR SKI-DOO OIL, the correct mixture is 20/1.

5 GALLONS, REGULAR GASOLINE plus 1 QUART, REGULAR SKI-DOO OIL = CORRECT FUEL MIXTURE.

*Trademark Bombardier Limited

When using CONCENTRATED SKI-DOO OIL, the correct mixture is 40/1.

5 U.S. GALLONS or 4 IMPERIAL GALLONS, REGULAR GASOLINE plus 1 PINT CONCENTRATED SKI-DOO OIL = CORRECT FUEL MIXTURE.

Note: *To facilitate fuel mixing, concentrated Ski-Doo oil should be kept at room temperature.*

Fuel Consumption Table

	Throttle	R.P.M.	H.P.	Time■
Model 440	Full	6500	28	1h. 48m.
	¾	6500	21	2h. 12m.
	½	5500	14	3h. 18m.
	¼	5500	7	6h. 36m.

	Throttle	R.P.M.	H.P.	Time■
Model 640	Full	5500	35	1h. 15m.
	¾	5500	26	1h. 30m.
	½	4500	14	3h. 15m.
	¼	4500	7	5h. 45m.

■ Running Time (in hours and minutes)

The Fuel Consumption table must be construed as approximate only. Results have been obtained by running static tests under full load, but cannot take into account such factors as snow conditions, carburetor adjustments, etc.

Fuel Mixing Procedure

To mix the gasoline and oil always use a separate clean container. Never mix directly in your snowmobile tank.

Note: *For best results, acquire two containers, either plastic or metal. Draw from one until empty then use the second one. Meanwhile, refill the first as soon as convenient.*

WARNING: Gasoline is flammable and explosive under certain conditions. Store in a well ventilated area. Always stop the engine and do not smoke or allow open flames or sparks near the vehicle when refueling. If gasoline fumes are noticed while driving, the cause should be determined and corrected without delay.

1. Pour the full amount of Ski-Doo oil required for the total mixture into the container.
2. Add approximately half the amount of gasoline to be mixed.
3. Shake the container thoroughly.
4. Add the remainder of the gasoline.
5. Once again thoroughly agitate the container.
6. Using a funnel with a fine mesh screen to prevent the entry of water and foreign particles, transfer the mixture from the container into the snowmobile tank.

PRE-START CHECK

Fuel Tank Quantity

Check that there is sufficient fuel in the tank for your trip. A good habit to acquire is to refill the tank before starting out each day.

Since mixed fuel has a tendency to settle overnight, agitate the fuel in the tank by standing on the footboards and rocking the vehicle from side to side.

Steering Operation

Check operation of steering mechanism by rotating the handlebars several times from side to side. If roughness or binding is felt, check for ice or snow that may be blocking the mechanism.

Throttle and Brake

Depress and release levers several times to check that they operate easily and smoothly. The throttle lever should return to the idle position when released. The brake lever should be fully applied when it is 1″ (minimum clearance) from the handlebar grip. If the levers do not return swiftly, remove cables and/or housings and replace. Re-check lever operation. **Do not start the engine until levers return swiftly.**

WARNING: Always check throttle and brake operation before starting engine.

YOU MAY NOW START YOUR SKI-DOO SNOWMOBILE.

BREAK-IN PERIOD

With Ski-Doo snowmobile engines, a break-in period is required before running the vehicle at full throttle.

Manufacturer's recommendation for the Bombardier-Rotax engine is ten (10) operating hours or the equivalent fuel consumption. (See page 3 for the equivalent fuel consumption of your vehicle). During this period, maximum throttle should not exceed ¾, except momentarily to attain cruising speed or avoid emergency. Before you took delivery of your new Ski-Doo snowmobile, the carburetor was adjusted by your Dealer for a rich fuel mixture. This permits better lubrication and cooling of the engine. Do not readjust, regardless of excessive smoke in the exhaust.

Inspection

As with any precision piece of mechanical equipment, **we suggest** that after the first 10 hours of operation or 30 days after purchase whichever comes first, that each Ski-Doo snowmobile has an inspection check. This inspection, which should take approximately 1½ hrs., is at the discretion and expense of the vehicle owner.

IMPORTANT: After the first 2 hours of operation, check drive chain tension. (See Maintenance Section).

TIPS

• By raising the outer attachment of the bogie wheel sets vehicle manoeuverability will increase.

You will note that there are partially drilled holes, located approx. 1⅜″ above the original cross shaft holes of the frame. (See Fig. 5). To reposition bogie wheel sets, drill holes fully through using a 5/16″ dia. drill. Remove capscrews securing bogie wheel cross shafts to frame and reinstall in new position.

Note: *Once holes have been drilled, both positions are interchangeable and may be changed at any time.*

• To start engine manually, when starter rope is broken, see Emergency Guide, Page 11.

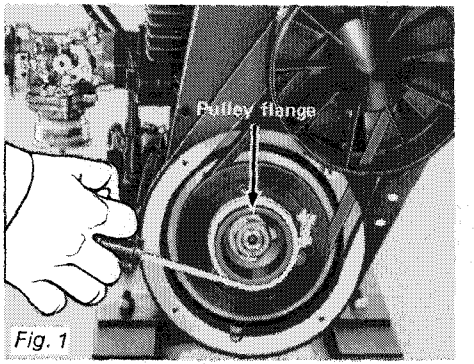

Fig. 1

STARTING PROCEDURE

WARNING: Whenever practical, place gear shift lever in NEUTRAL position when starting engine.

The brake DOES NOT operate with lever in NEUTRAL, so use caution on inclined surfaces.

Never run the engine at HIGH R.P.M. when gear shift lever is in NEUTRAL.

Electric Starting

For Models with electric starter:

1. Insert key in ignition switch (C).
2. Engage choke (E). (Choke is not necessary if engine is warmed up.)
3. Test throttle operation then apply throttle lever (A) slightly.
4. Turn ignition key clockwise until starter engages.

CAUTION: *Do not engage starter longer than 30 seconds.*

If engine does not start on first try, key must be turned fully back to OFF each time. Allow starter to cool for 2 minutes before repeating procedure.

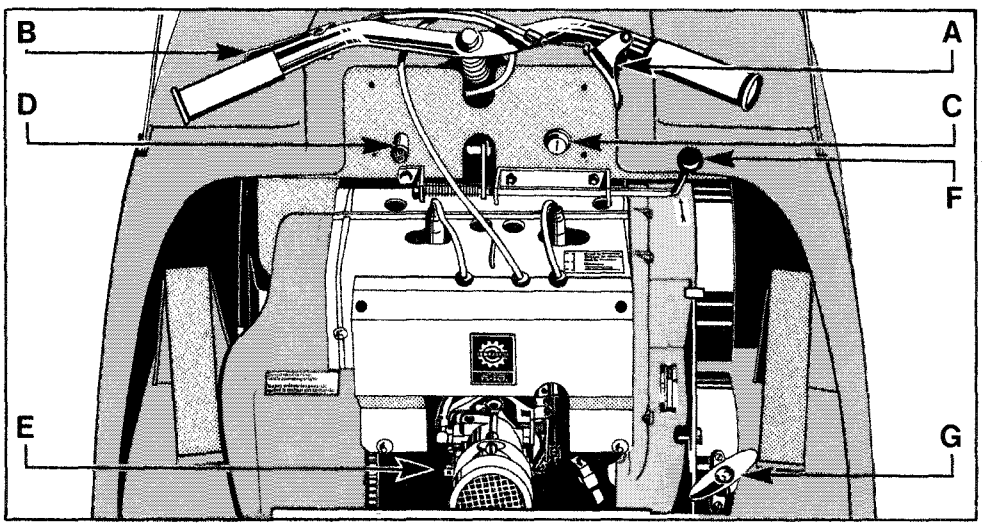

5. **Release** throttle and return key to ON *immediately* engine has started.
6. Disengage choke (E).

CAUTION: *Never operate the Ski-Doo snowmobile with the battery removed or disconnected.*

7. Allow the engine to warm up **before** operating at full throttle.

Manual Starting

Every Ski-Doo snowmobile is equipped with a manual starter (auto-rewind type) located on the right hand side of the engine. To start the engine manually:

1. Insert key in ignition (C) and turn to ON position.
2. Engage choke (E). (Choke is not necessary if engine is warmed up).
3. Test throttle operation then apply throttle lever (A) slightly.
4. Grasp manual starter handle (G) firmly and pull slowly until a resistance is felt then pull vigorously and engine will start. Allow handle to return slowly to its original position. If engine does not start, repeat the procedure.

Note: *Do not pull starting rope to its fullest extent or allow starting handle to "fly back" to its original position.*

5. **Release** throttle (A), disengage choke immediately engine has started.
6. Allow the engine to warm up **before** operating at full throttle.

LUBRICATION

Code	Weekly	Page
L1	Ski Assembly	6
L2	Steering Mechanism	6
L3	Gear Box Oil Level	6
L4	Suspension	7
Code	**Monthly**	**Page**
L5	Driven Pulley	7
L6	Drive Pulley	7

Cab and Console Removal

To remove cab, unlock latches (2), disconnect electrical connectors (2), remove fuel tank cap and lift cab. (Valmont only), to remove console unlock latches (2) at base of console then remove.

WARNING: Always stop engine before removing cab and do not start it until cab is closed and latches are fastened.

Pulley Guard Removal

1. Remove cab and console (Valmont only).
2. Pull out retaining clip and pull on spring bolt to disengage pin from bracket.
3. Move pulley guard toward front of vehicle to disengage it from chain case bracket.

WARNING: Never start the engine or operate the vehicle when the pulley guard is not installed.

Drive Belt Removal

To remove drive belt:

1. Remove cab, console (Valmont models) and pulley guard.
2. Disconnect brake cable at disc brake unit.
3. Remove the two (2) bolts holding the lower disc brake bracket to the frame. Pivot the brake bracket assembly half a turn.
4. Open the driven pulley (larger pulley). Twist and push the sliding half then hold in open position.
5. Slip the belt out from the drive pulley (centrifugal governor) and remove from vehicle by passing it under the driven pulley and disc brake assembly. (See Fig. 2).
6. To install drive belt, follow reverse procedure. Check brake adjustment (See BRAKE, page 10).

WARNING: Never start or run the engine without drive belt installed.

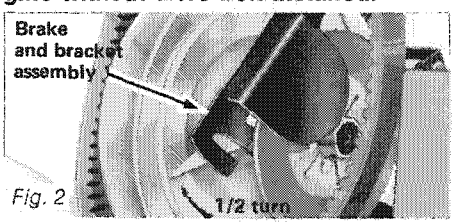

Fig. 2

(L1) Ski Assembly

Lubricate spring coupler bolt with oil.

(L2) Steering Mechanism

Using light machine oil, lubricate the spring located on top of steering column housing, allowing oil to run in. Oil the mobile contact point at bottom end of steering arm. Using a small brush, dipped in low temp-grease, lubricate steering arm ball joint. Grease the ski leg at grease fitting until new grease appears at the joint. (See Fig. 3).

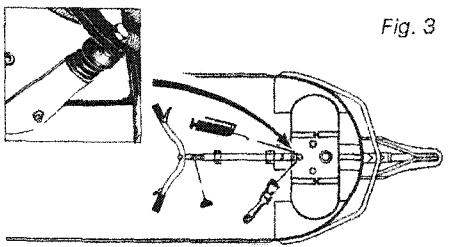
Fig. 3

(L3) Gear Box Oil Level

All 440R and 440ER models have an oil capacity of 12 ozs. The 640ER model has an oil capacity of 16 ozs. To check:

1. Remove rubber inspection cover located on bottom right side of gear box.
2. Using a rigid piece of wire as dipstick, check oil level (See Fig. 4). On 440R and 440ER models, oil level must reach 2¼" on dipstick. On 640ER model, oil level must reach 3¼".

To fill, remove filler cap (red cap) from top of gear box. Refill as required using Ski-Doo* chain case oil.

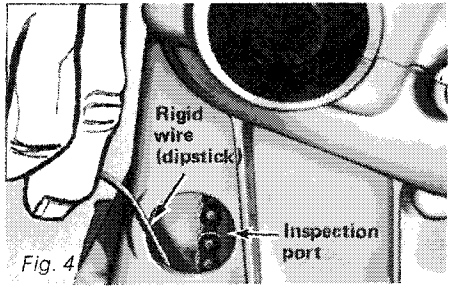

Fig. 4

(L4) Suspension

Grease the suspension bogie wheels with low-temp grease, using a low pressure grease gun. Pump through the grease fitting at the centre of each wheel until new grease appears at the joints of inner side of shaft. (See Fig. 5).

To grease the inner side bogie wheels, tilt vehicle on its side and apply pressure on track to expose grease fittings.

Also, grease rear axles at grease fittings.

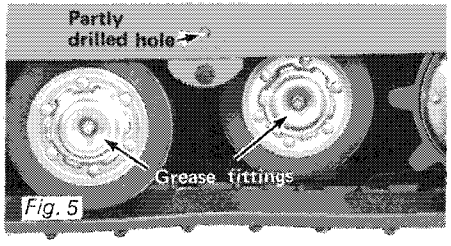

Fig. 5

(L5) Driven Pulley

With cab removed, grease the driven pulley shaft, as follows:

1. Remove pulley guard and slip off drive belt. Open the driven pulley, (push and twist sliding half).
2. Thoroughly clean the driven pulley shaft.
3. Apply a light coat of Ski-Doo* clutch lube on the shaft.

Note: *Activate the sliding half several times to distribute lubricant over full length of shaft. Be careful that lubricant does not get on inner halves of pulley.*

CAUTION: *Excess lubricant on pulley shaft can penetrate drive belt causing slippage and deterioration. Always lubricate lightly and wipe off surplus.*

(L6) Drive Pulley *(or each 40 hours)*

1. Remove cab and pulley guard then slip off drive belt.
2. Remove centrifugal governor as follows:
   - Remove spark plugs and position the left side (P.T.O.) piston ¾" to 1¼" BEFORE top dead center, making sure that the piston closes the exhaust port.
   - Accede by the spark plug hole and pack the cylinder with 3/16" dia. rope. (See Fig. 7).
   - Pull manual starter to rotate crankshaft until piston bears against "cushioning".
   - Unscrew centrifugal bolt, remove centrifugal governor then pull out rope from spark plug hole.
3. Thoroughly clean the inner pulley shaft using fine steel wool and a clean cloth.
4. Apply a light coat of Ski-Doo* clutch lube to the four (4) flyweights of the centrifugal governor.
5. Making sure that the aligning mark on inner pulley half coincides with the aligning mark of the outer pulley half, pack inside of pulley shaft with Ski-Doo* clutch lube. (See Fig. 7).
6. Using light machine oil, lubricate the governor bolt threads and install governor.

Note: *Installation procedure is reversed insuring that the rope is inserted into* ***same*** *cylinder when piston is ¾" approx. AFTER top dead center.*

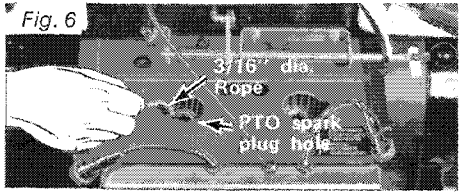

Fig. 6

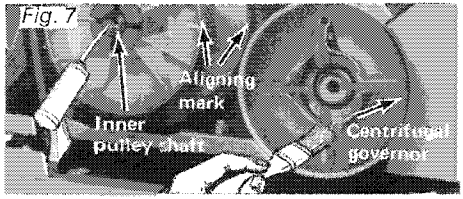

Fig. 7

*Trademark Bombardier Limited

MAINTENANCE

Code	Weekly	Page
W1	Spark Plugs	8
W2	Battery	8
W3	Suspension Springs	8
W4	Tracks	8
W5	Track Tension	8
W6	Track Alignment	9
W7	Carburetor Adjustment	9
W8	Drive Belt Condition	9
W9	Drive Chain Tension	10

Code	Monthly	Page
M1	Carburetor Flange Nuts	10
M2	Muffler Attachment	10
M3	Brake	10
M4	Steering Adjustment	10
M5	Engine Head Nuts	10
M6	Engine Mount Nuts	10
M7	Vehicle General Inspection	10

(W1) Spark Plugs

1. Remove console. (Valmont models only). Disconnect spark plug wires.

2. Check condition of plug.
Normal color is "brownish" (See Fig. 8). If spark plug color is abnormal (black or light grey) the engine is not running under ideal conditions, due to either;

- Use of incorrect fuel mixture. (See Fuel Mixing, page 3).
- Carburetor incorrectly set. (See Carburetor Adjustment, page 9).
- Wrong type of spark plug. (See Specifications, page 1 for correct spark plug heat range.

Fig. 8

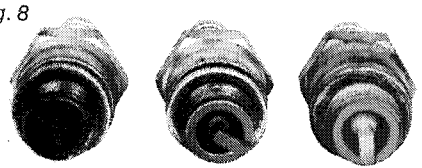

Carbonized **Normal** **Burnt**

(W2) Battery

(Electric Model only)

Remove battery caps then check electrolyte level in each cell. Electrolyte level must touch bottom of filler hole. If necessary, add Distilled Water up to this level.

(W3) Suspension Springs

With engine OFF, visually inspect suspension springs. Replace any weak or broken spring.

(W4) Tracks

Lift rear of vehicle and support it off the ground. Place gear shift lever in neutral. With engine OFF, rotate tracks by hand and inspect condition. If bad cuts or missing track inserts are noted, see your dealer.

(W5) Track Tension

Lift the rear of vehicle and support it off the ground. Using a rule, check track tension. On Valmont models, take measure at the middle set of bogie wheels. On Alpine model, check measure at the second set of bogie wheels from rear.

The track tension (distance from the top inside edge of the track to the lower edge of the body) should be **2¼ inches plus or minus ⅛ inch** (See Fig. 9). If necessary to adjust:

1. Unscrew the lock nuts situated on the inner side of the suspension springs of one track (See Fig. 10).

2. Adjust to proper tension by turning adjuster bolts clockwise to tighten track, counter-clockwise to slacken. Adjust both sides equally.

3. Repeat procedure for other track and proceed with track alignment.

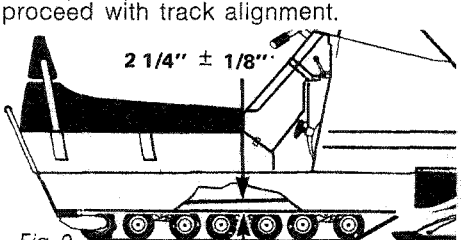

Fig. 9

(W6) Track Alignment

After track tension has been corrected, start the engine and accelerate slightly so that tracks turn **slowly.** Check that tracks are well centered and turn evenly on rear sprockets.

The distance between the edges of tracks and the link plates should be the same on both sides. Misalignment can cause excessive wear of track edges and sprocket teeth.

To adjust:

1. Using wrench, turn track adjuster screw clockwise on the side where the track is closest to the link plate until track aligns. (See Fig. 10).
2. Firmly retighten adjuster lock nuts.
3. Rotate track slowly and recheck alignment.

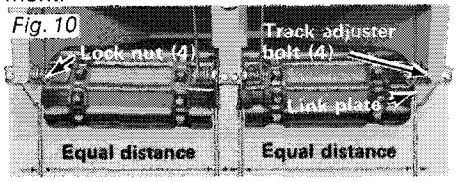

Fig. 10

(W7) Carburetor Adjustment

Maximum Throttle Opening

With engine OFF, unscrew the Idle Speed Adjusting screw until a gap exists between screw end and carburetor shaft lever. Depress the throttle lever at handlebar and **hold.** Throttle butterfly should be horizontal when the lever gently touches the handlebar grip.

To adjust for maximum opening, loosen screw at point where cable joins carburetor lever.

With finger, hold carburetor throttle lever in fully open position (UP), pull cable downward until taut. Retighten screw, **ensuring throttle is fully depressed.**

WARNING: Before starting engine, make sure carburetor throttle lever returns to idle position when handlebar throttle lever is released.

Idle Mixture Adjustment

A primary adjustment (with engine OFF) should be made by first turning idle mixture screw fully clockwise until closed. Back off screw ¾ of a turn counter-clockwise. (See Fig. 11 or 12).

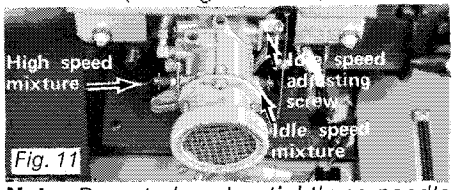

Fig. 11

Note: *Do not close too tightly as needle and/or needle seat can be damaged.*

For final adjustment, start engine and allow it to **warm up.** Turn idle mixture screw until engine reaches maximum R.P.M. and obtain a steady idle and a fast response of the engine to the throttle.

Idle Speed Adjustment

Turn the idle speed adjusting screw clockwise to increase idling speed, counter-clockwise to decrease. (Fig. 11 or 12).

High Speed Mixture Adjustment

WARNING: High Speed Mixture adjustment must be carried out *only* by an authorized Ski-Doo dealer.

For primary adjustment however, with engine **OFF,** turn high speed mixture adjusting screw fully clockwise until it closes. (Do not close too tightly as screw and/or screw seat can be damaged).

Then back off screw 1¼ turns counter-clockwise. (See Fig. 11 or 12).

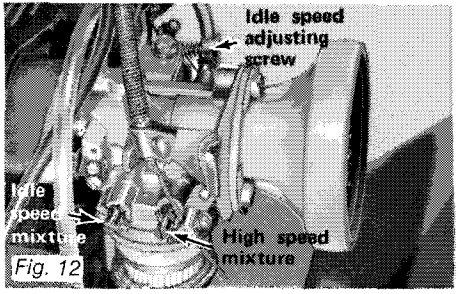

Fig. 12

(W8) Drive Belt Condition

To check the condition of the drive belt:

1. Remove cab and pulley guard.
2. With engine OFF and gear shift lever in NEUTRAL position, rotate drive belt. If belt is less than ⅞" wide or if it shows abnormal or uneven wear it should be replaced. To replace, see Drive Belt Removal, Page 6.

Note: *Probable cause of abnormal wear is pulley misalignment. Contact your dealer.*

(W9) Drive Chain Tension

Before checking, be sure that vehicle has been run forward so that true free-play will be on side exposed by inspection port. (See Fig. 13).

Check tension then turn driven pulley ½ turn counter-clockwise and recheck. Starting from maximum reading, adjust chain tension to ¼" free-play.

1. Remove capscrew locking chain tensioner in place. (See Fig. 13). Tensioner is located at bottom left of gear box.
2. Rotate the tensioner as required to obtain correct chain tension.
3. Replace capscrew to lock chain tensioner in place.

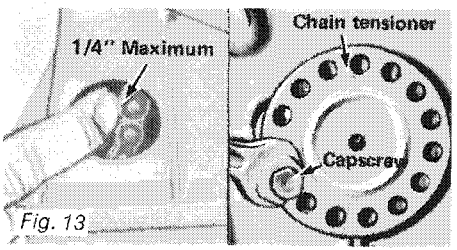

Fig. 13

(M1) Carburetor Flange Nuts

After the first 2 hours of operation, check tightness of carburetor flange nuts. Use the 13mm open end wrench provided in the tool kit, and tighten.

(M2) Muffler Attachment

With cab removed, tighten nuts and bolts attaching muffler to flanges and brackets. Loose muffler attaching parts will greatly reduce muffler life.

(M3) Brake

Brake should be fully applied when lever is 1" from handlebar (See Fig. 14). To adjust:

1. With cab removed, slacken cable lock nut located at cable end nearest frame (See Fig. 14).
2. If brake lever is too **low,** grasp free end of cable with pliers and pull evenly. Retighten nut.
3. If brake lever is too **high,** depress brake lever slowly to position desired. Retighten nut.

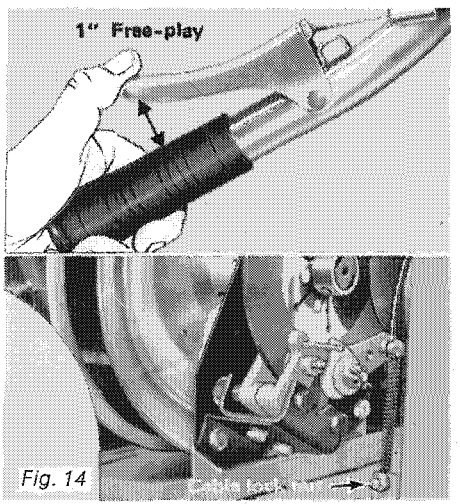

Fig. 14

(M4) Steering Adjustment

Ski should be perpendicular to handlebar.

To align:

1. Remove bolt securing handlebar to steering column.
2. Remove handlebar to expose splined end of steering column.
3. Reposition handlebar on splines so that it is perpendicular with ski. Install and **fully tighten bolt.**

(M5) Engine Head Nuts

With cab removed, check that engine head nuts are tight and equally torqued, (16 to 18 ft./lbs when COLD).

(M6) Engine Mount Nuts

With cab and console removed, check engine mount nuts. Retighten if necessary.

(M7) Vehicle General Inspection

With cab tilted, check electrical wiring and components, retighten loose connections. Check for stripped wires or damaged insulations. Thoroughly inspect the vehicle and tighten loose bolts, nuts and linkages. Close cab and clean the chassis throughout. Wax the cab for greater protection. Special Ski-Doo* paints, for necessary touch ups, are available at your dealer.

*Trademark of Bombardier Limited

EMERGENCY GUIDE

The following charts list the "most likely to occur" problems, their possible causes and remedies. Should you encounter trouble on the trail, first identify the symptoms then rectify, using your manual to assist you.

Trouble	You Should Carry	What To Do
Burnt Light Bulb	Spare headlamp and Taillight bulbs	If headlamp is burnt, **stop engine**, unlock cab latches (2) and tilt cab. Unfasten bulb retainer clips. Detach bulb and replace. If taillight bulb is burnt, expose bulb by removing red plastic lens. To remove, pry off red plastic lens using flat bladed screwdriver.
Broken Throttle Cable	Spare throttle cable and housing Pliers	Remove throttle cable and replace. Check lever operation. If necessary replace housing. **Do not start the engine until levers return swiftly.**
Broken Rewind Starter rope	Spare Rope or length of similar diameter Rope. 10mm Wrench	If rope is broken inside starter unit, remove starter unit, using 10mm wrench supplied in Tool Kit. Make a knot at end of remaining rope at end opposite handle. Wind remainder of rope around pulley. Pull vigorously, as per usual manual start. (See Fig. 1, page 4).
Tips	Some suggestions for long trips are: Snowshoes, Axe, Waterproofed Matches, High-energy Foods, Tools and Spare Parts.	Travel with friends or in company with other snowmobiles. When exploring new areas, always use the "buddy" system. Even then, don't be foolhardy. Plan your trips and carry at least some sort of rough guide showing fuel stops and shelter. **Always know where you are.** Unless you do, stay on known trails and familiar terrain.
Fuse (Electric Model only)	Spare Light Fuse. Flashlight	If both headlamp and taillight go out at same time, most possible cause is burnt fuse. Check light fuse filament, if broken, replace. Light fuse is in fuse holder on red wire going from starter to rectifier.
Out of Fuel		In emergency, fuel can be siphoned from companion or passing vehicle. To siphon, disconnect both fuel lines of vehicle with fuel, at carburetor. Position vehicle with fuel higher than vehicle with empty fuel tank. Run longer line into empty fuel tank, (or container, if available). Placing hand over open filler neck of tank with fuel, to form a seal and build pressure, blow into open end of shorter fuel line until flow starts.

TROUBLE SHOOTING GUIDE

Symptoms	Possible Causes	What To Do
Engine turns over but fails to start or starts with difficulty	1 — No fuel to the engine	Check the tank level and fill up with correct gas-oil mixture. (Refer to Fuel Mixing, Page 3). Check for possible clogging of fuel line, item 5.
	2 — Spark plug	Check for fouled or defective spark plug. Disconnect spark plug wire, unscrew plug and remove from cylinder head. Reconnect wire and ground exposed plug to engine head, being careful to hold away from spark plug hole. Follow engine starting procedure and check for spark. If no sparks appear, replace spark plug. If trouble persists, check item 3.
	3 — Faulty ignition	Disconnect spark plug wire from plug, unscrew the spark plug cap then hold wire about ⅛″ from the cylinder head. Follow engine starting procedure and if no sparks appear, it means a faulty ignition system. Do not attempt to repair. Contact your dealer.
	4 — Flooded engine	Turn choke knob to OFF, wait 60 seconds or more then depress throttle lever fully and try to start engine. **Release throttle lever immediately after engine starts.**
	5 — Clogged fuel line (water or dirt)	Remove and clean the fuel filter. Change filter cartridge if necessary. Check the cleanliness of the fuel tank. Clean tank if necessary. (See Fuel Tank, Storage Section).
	6 — Idle speed adjustment	Screw in the idle speed mixture adjusting screw and turn it back ¾ of a turn. Make final adjustment with engine running and warmed up.
	7 — Faulty carburetor	First make primary adjustments on carburetor. (See Maintenance Section). If carburetor is still faulty, contact your dealer for repair.
	8 — Too much oil in fuel	Drain the fuel tank and refill with the correct gas/oil mixture. (Refer to Fuel Mixing).
	9 — Breaker points	Breaker points may be worn or out of adjustment. Contact your dealer.
	10 — Poor engine compression	Running with a lean fuel mixture may produce excessive engine wear resulting in poor engine compression. If this occurs, contact your dealer at once.
Engine will not turn manually	1 — Seized engine	In the case of a seized engine, contact your dealer. Seizure is a direct result of poor lubrication.

Symptoms	Possible Causes	What To Do
Engine will not start (electric model only) **Note: If failure is in starting system, engine will start manually**	**1 — Poor connections or Burnt Fuse**	Check for loose or corroded battery and starter connections. Tighten and clean if necessary, also check fuse located on red wire leading from rectifier to starter. Try to restart engine electrically. If engine still does not start, check item 2.
	2 — Battery	Check condition of battery by turning lights ON. If lights are dim or out, battery may be discharged or defective. Contact your dealer to charge or replace.
	3 — Starter	If wire connections are tight and fuse and battery are all in working order, most probable cause of trouble is defective starter. Contact your dealer for repair.
Engine lacks acceleration or power	**1 — Fouled or defective spark plug**	Change your spark plug. Fouled spark plug may be cleaned, regapped and tested by your dealer. (See Spark Plug, Maintenance Section).
	2 — Clogged fuel line (water or dirt)	Remove and clean fuel filter. Change filter cartridge if necessary. Check fuel line condition and connections. Check cleanliness of fuel tank. Clean if necessary.
	3 — Carburetor	Readjust the carburetor. If the trouble persists, contact your dealer.
	4 — Defective ignition	First check items 2 and 3 of "Engine turns over but fails to start or starts with difficulty". If the ignition system still seems defective, contact your dealer.
	5 — Engine	If unable to locate specific symptoms, contact your dealer.
Engine continually backfires	**1 — Faulty spark plug**	Check item 1 of "Engine lacks acceleration or power".
	2 — Overheated	Carburetor set to lean. Readjust.
	3 — Engine timing incorrectly set	Contact your dealer.
Snowmobile cannot reach full speed	**1 — Drive belt**	Check for defective or worn drive belt. Replace if necessary.
	2 — Pulley misaligned	If the drive and driven pulleys are not aligned correctly, contact your dealer.
	3 — Incorrect track adjustment	Check track tension and alignment. Readjust to specifications. (See Maintenance Section).
	4 — Faulty engine	Check items 1 to 5 of "Engine lacks acceleration or power".

STORING PROCEDURE

It is during Summer, or when a vehicle is not in use for a month or more, that proper storage is a **necessity.**

IMPORTANT: The necessity of proper storage cannot be overstressed. If you lack the time or proper tools, be sure to see your authorized Ski-Doo Dealer.

(S1) Tracks

1. Inspect tracks for cuts, missing track inserts or broken rods and make any necessary replacements.
2. Lift rear of vehicle until tracks are clear of ground then support with brace or trestle. The Ski-Doo snowmobile should be stored in such a way that tracks do not stay in contact with cement floor or bare ground.

Note: *Due to the material change of the '72 track, we recommend to keep the spring tension applied. However, the tracks should be rotated periodically, (every 40 days).*

(S2) Suspension

(bogie wheels)

1. Remove the bogie wheel sets from the vehicle.
2. Remove cross shaft from bogie wheel set. Clean bogie wheel assembly and cross shaft of dirt or rust.
3. Grease each bogie wheel until all old grease is flushed out.
4. Spray bogie wheel springs with Ski-Doo* metal protector. If unavailable, wipe with cloth or rag soaked in oil. Check condition of shaft and replace if bent or worn. Apply a coat of low temp. grease on cross shaft.

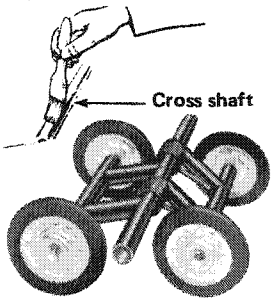

Fig. 15

5. Reassemble entire bogie wheel set, making sure assembly moves freely.
6. Reinstall bogie wheel set.
7. Repeat above steps on remaining bogie wheel sets.
8. Lubricate rear hub through grease fittings.

(S3) Ski Assembly

1. Wash or brush all dirt or rust accumulation from ski and spring.
2. Grease ski leg at grease fitting.
3. Check condition of ski runner. Replace if worn.
4. Apply Ski-Doo* metal protector on ski assembly. If unavailable, wipe the entire ski with cloth soaked in oil to prevent rust formation.

*Trademark Bombardier Limited

(S4) Fuel Tank

1. Disconnect fuel lines by pulling plastic lines away from tank. (See Fig. 16).
2. Remove tank retainer straps bolts, pull out fuel tank from vehicle and drain it.
3. Rinse inside of tank thoroughly with fresh gasoline.
4. Reinstall fuel tank.

WARNING: Gasoline is flammable and explosive under certain conditions. Always perform this procedure in a well ventilated area. Do not smoke or allow open flames or sparks near the vehicle.

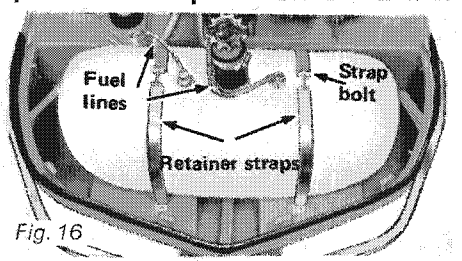

Fig. 16

(S5) Carburetor

The carburetor must be dried out completely to prevent gum formation during the storage period.

1. Assure that fuel lines are disconnected then start the engine and run it out of gas.
2. Engage choke, then pack the carburetor throat with a clean piece of cloth and turn the engine a few more times. The suction should eliminate the remaining fuel.

(S6) Cylinder Lubrication

1. Remove spark plugs.
2. Connect ignition wires to spark plugs and ground plugs to prevent magneto damage.
3. Operate rewind starter to bring piston to the top position.
4. Pour about **one** spoonful of Ski-Doo* oil into spark plug hole (See Fig. 17).
5. Slowly crank engine 10 to 12 times using manual starter.
6. Repeat procedure for other cylinder.
7. Install spark plugs.

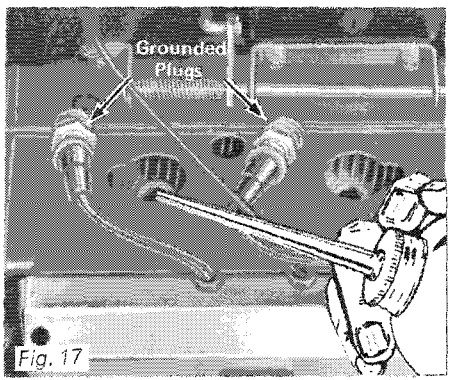

Fig. 17

(S7) Gear Box

Drain transmission gear box and refill with 12 ozs. (440R and 440ER models) or 16 ozs. (640ER model) of fresh Ski-Doo* chain case oil.

*Trademark Bombardier Limited

(S8) Controls

1. Oil steering mechanism linkage (See Fig. 3).
2. Oil moving joints of brake mechanism.

Avoid getting oil on brake shoe.

3. Coat all electrical connections and switches with Ski-Doo* metal protector (greaseless).

(S9) Pulleys

1. Remove cab, console and drive belt. (See Maintenance Section).
2. Thoroughly clean the driven pulley shaft. Apply a light coat of Ski-Doo* clutch lube on shaft .
3. Activate the sliding half several times to distribute lubricant.
4. Lubricate drive pulley following the procedure detailed in Lubrication Section
5. Spray internal pulley surfaces with Ski-Doo* metal protector.

Note: *Leave drive belt OFF during entire storage period.*

(S10) Battery

(Electric model)

1. Open seat, disconnect battery and remove it from vehicle.
2. Clean outside surfaces of battery. **Do not** allow cleaning solution to enter battery.
3. Fully charge battery (trickle charge) and store in a cool dry place.

Note: Recharge battery at least every 40 days to prevent sulphation.

HOW TO IDENTIFY YOUR SKI-DOO SNOWMOBILE

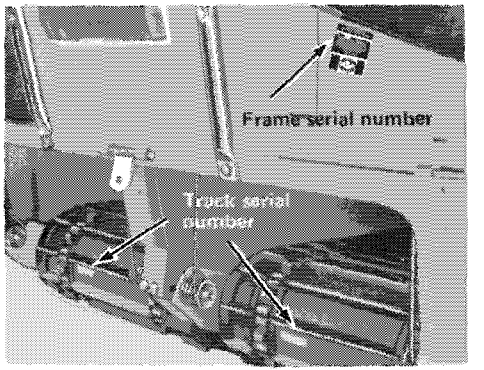

Vehicle Serial Number (Frame)

The serial plate is located on the right side of frame, at rear.

Engine

The identification plate is located at the right side of the engine, on the fan cowl, above the manual starter handle.

Tracks

The serial number is stamped directly into each track, at one of the recesses formed by the track ribs. To locate, turn tracks slowly until number appears between the rear sprockets.

IMPORTANT: Your Dealer retains a file copy of your registration. Should you lose or misplace your Service Card, he will be more than pleased to assist you.

WARRANTY 1972 SKI-DOO SNOWMOBILE — U.S.A. and CANADA

Bombardier Limited (Bombardier), as manufacturer, warrants every 1972 Ski-Doo snowmobile **sold as a new vehicle, by an authorized Ski-Doo dealer,** to be free from defects in material, and workmanship under normal use and service, for a period of ninety (90) days from the date of the original retail purchase, subject to the following exceptions:

1. Should the date of said original retail purchase be within ninety (90) days immediately preceding March 31, the warranty period shall be for a period of ninety (90) days, beginning on the date of said retail purchase until March 31 and the balance of said warranty period shall be carried over into the following winter season beginning with the date of the first snowfall, but not later than the **next 15th day** of December.
2. Should the date of said original retail purchasing be on or after March 31, the said warranty period shall be for a period of ninety (90) days, beginning on the date of the first snowfall during the following winter season, but not later than the next **15th day** of December.
3. This warranty does not apply to Ski-Doo snowmobiles used for racing purposes nor to Blizzard Ski-Doo snowmobile models.

An exception to the above warranty period is that transmission drive belts are warranted for thirty days from date of retail purchase of the Ski-Doo snowmobile subject to the afore-mentioned exceptions.

Bombardier's obligation under this warranty is strictly limited to the repair or replacement at its option, of any part or parts thereof which shall, within the specified warranty period, be returned to an authorized Ski-Doo dealer at such dealer's place of business and, which examination shall disclose to the satisfaction of Bombardier to have been thus defective. The repair or replacement of defective parts under this warranty will be made by such dealer, without charge for parts or labour, under the following conditions only:

1. That proof of ownership and warranty registration be submitted to the dealer by means of the Ski-Doo Service Card.
2. That warranty repairs be effected at the Dealer's place of business.

This warranty does not apply to normal maintenance services, (including but not limited to normal wear on rubber drive belts, slider shoes on transmission cams and slide rail suspensions, including all engine or other adjustments and alignments) or to replacement of service items (including but not limited to spark plugs, ignition points and condensers, filters, brake linings, light bulbs and lenses, ski-runner shoes, paints, lubricants or fasteners) made in connection with such services, or to normal deterioration of soft trim and appearance items due to wear and exposure.

This warranty does not apply to any defect which results from: I) misuse or accident; II) installation of repair parts other than genuine Bombardier replacement parts or; III) repairs by any person other than an authorized Ski-Doo snowmobile dealer; IV) lack of preventative maintenance; V) alterations or modifications other than those approved in writing by Bombardier.

Operating a Ski-Doo snowmobile in a race, or modifying it with high performance parts (whether or not such parts are supplied by Bombardier or are installed by an authorized Ski-Doo snowmobile dealer) or operating a Ski-Doo snowmobile on surfaces other than snow or ice, will be considered a misuse.

This warranty is expressly in lieu of all other expressed or implied warranties of Bombardier, its distributors and the selling dealer, including any implied warranty of merchantability or fitness for any particular purpose. Neither Bombardier, its distributors nor the selling dealer shall be responsible, under any circumstances, for any loss or damage as a result of hidden defects, accidents, misuses or other faults.

Neither the distributor, the selling dealer nor any other person has been authorized to make any affirmation, representation or warranty other than those contained in this warranty and if made, such affirmation, representation or warranty shall not be enforceable against Bombardier or any other person.

This warranty does not apply to any losses resulting from:

- Traveling time, mileage, telephone calls, telegrams, taxi or towing charges or the rental of a vehicle during the period of repair.
- Transportation of the vehicle, engine, parts or accessories.

NOTE: *In the event of change of ownership, complete the notice of transfer form below in order to quality the new owner for balance of warranty. All such transfers should be reported to an authorized Ski-Doo dealer for modification of the Ski-Doo Service Card.*
In the event of a lost Service Card, contact the original selling dealer for completion of the "Request for New Service Card" form. For a $2.00 handling charge, Bombardier will mail your new personalized Service Card to you.

Bombardier Limited,
Valcourt, Québec, Canada. May 1971.

NOTICE OF TRANSFER

Vehicle Serial No. ☐☐☐☐☐☐

The ownership of this vehicle is transferred

From _____ Signature of registered owner

_____ Full name of purchaser

To _____ *Block letters*

Address _____ No Street or Village

_____ City County

Date

Purchaser's Signature

Ski-Doo* Sports clothing and accessories

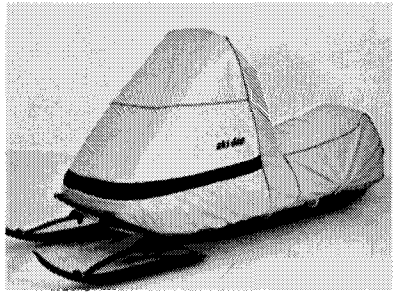
A

A. Covers are available for each Ski-Doo* snowmobile model. Features include phosphorescent stripes for night visibility, flannellette lining windshield pocket for protection against scratches, and side attachment cords to protect against flapping.

B. Snowmobilers can choose from three different styles of goggles: the "junior", the "regular" and the "T'NT."* The goggles have air vents to prevent fogging and come with interchangeable green and yellow lenses.


B


D

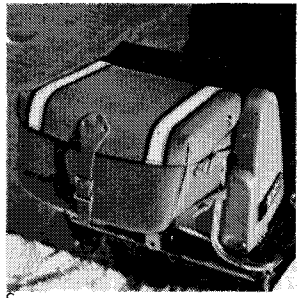
C


E


F

C. Very useful to the snowmobiler is this saddle bag. It is made of waterproof leather and has phosphorescent safety stripes for night outings. Repair kits or any other necessary items can be tucked away in the saddle bag for safaris.

D. Three different styles of snowmobiling helmets — all exceeding government specifications — are available. They provide sturdy protection with a polycarbonate shell lined with styrofoam, phosphorescent stripes on the side for night snowmobiling and quick release adjustable chin strap with comfortable chin cup. There are also two shades of snap-on visors — clear or tinted — for extra face protection from the wind, tree branches, and sun.

E. For snowmobiling and après-sports, Ski-Doo Sports has a variety of knits; suits, sweaters with matching tuques. They come in a multitude of colours. Six different styles of sweaters for the family and three elegant knit suits; one available for couples as well as children, the two others for ladies only.

F. To really enjoy snowmobiling, it is important to be dressed properly. Ski-Doo Sports, the "couturier" of snowmobile and winter fashions offers as many as twelve different styles in 1972. Clothing is made of water-resistant nylon or synthetic leather, both are lined with orlon fleece. Not to mention the array of accessories: boots, mitts, hats and many other items.

Ski-Doo Sports Ltd. is a subsidiary of Bombardier Limited
June 71 *Trade marks of Bombardier Limited, Valcourt, Quebec, Canada.
Litho'd in Canada. 480-0046

BOMBARDIER LIMITED